ACA 3537
ISSUE 12-2006

INSTRUCTION MANUAL – USE – MAINTENANCE

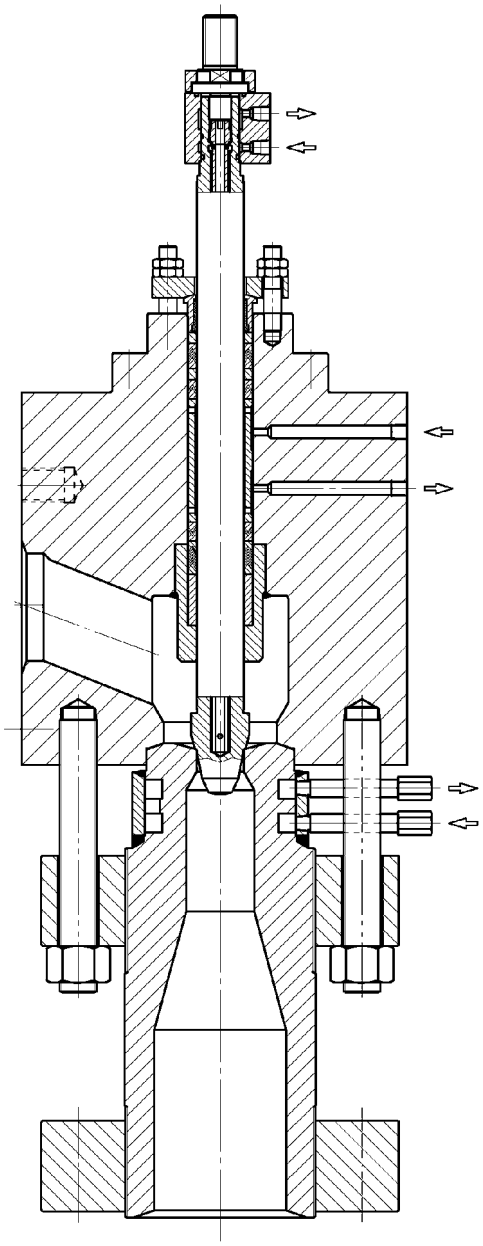

1-4825 SERIES CONTROL VALVES

SAFEGUARDS

GENERAL NOTICES

Beside the rules here below listed the plant manager must meet the regulation in force concerning safety and health of workers in jobsites.

Qualified staff only must be used to operate on the valve.

The Company rejects any responsibility for personal injury and damages to equipment imputable to improper operation, use of non original spare parts or repairs executed by unauthorised staff.

Transportation must be performed utilising original packing up to job-site.
The Company rejects any responsibility for damages occurred to things and people due to packing because of having been tampered with.

USE AND MAINTENANCE

Pay attention to the stem connector and levers connected to the stem, if any.

Never approach your hands to stem and levers even when the valve is still, unless air supply is cut off and spring is released.

DISASSEMBLY

WARNING DANGER ⚠
To avoid personal injury and damage to the process system, isolate the valve from all pressure and release pressure to the valve body before attempting also partial disassembling.

WARNING DANGER ⚠
To avoid personal injury and damage, isolate the actuator from all pressure and release pressure before attempting disassembling connectors.

Stick to instruction manual when disassembling the actuator, even partially.

LIFTING AND HANDLING

When lifting use eyebolts, if any, otherwise sling the valve body.

WARNING DANGER ⚠
Valve-actuator assembly can be lifted by means of eyebolts provided on the actuator, unless otherwise specified in special plates.

NOISE

In particular conditions the valve may generate high noise levels. In such cases it is therefore necessary to take the necessary precautions, according to the regulation in force.

TEMPERATURE

In case that hot fluids flow through the valve, the operator must pay attention to not insulated parts.

STUFFING BOX

WARNING DANGER ⚠
Packing must not be released or replaced when valve is under pressure.

LIMITATION OF USE

Residual hazards with regard to essential safety requirements of Annex I of European Pressure Equipment Directive no. 97/23/EC

If not otherwise specified, the following use limitations have to be considered for PARCOL *globe control valve*.

0 – MAXIMUM WORKING PRESSURE AND TEMPERATURE
Before placing the valve in pipe line make sure that maximum working pressure and temperature are within the limits of body rating and lower than allowable maximum values indicated on valve serial plate.

1 – MINIMUM WORKING TEMPERATURE
Control valves having Carbon Steel body material (SA-105 or SA216 WCB) are suitable for a minimum working temperature down to –20°C when working pressure is at its maximum rating listed value. If working temperature is down to –29°C, the maximum pressure must be reduced to 1/3 of its maximum rating listed value. Control valves having Cr. Mo. alloy steel body material (SA217 WC6, SA217 WC9, SA217 C12A, SA182 F11, SA182 F22, SA 182 F91, etc.), particularly suitable for high temperature services, the minimum working temperature at maximum rating listed pressure shall be +20°C. It is possible to reach a minimum working temperature of –29°C but maximum working pressure must be reduced to 1/3 of its maximum rating listed value at ambient temperature.

RATING ANSI	Rating pressure [1] *bar*	Pressure at T ≤ 20°C [1] [2] *bar*
150	20	7
300	51.7	17
600	103.4	34
900	155.1	52
1500	258.6	86
2500	431	144
4500	775.7	259

[1] Referring to SA217 WC6/WC9 or SA182 F11/F22
[2] Also during hydrostatic pressure test at T ≤ 20°C

2 – EXPECTED WORKING LIFE IN CREEP RANGE
When control valves are used at a working temperature within the creep range (as listed on the following table), the guaranteed expected lifetime is in any case not lower than 100.000 hours of continuous operation at rating listed pressure corresponding to working temperature.

Material	T beginning creep
Carbon steels (i.e.: A216 WCB-A105)	343°C
CrMo steels (i.e.: A217 WC9-A182 F22)	455°C
300 series cast austenitic steels	510°C
9% Cr Mo V steels (i.e.: A217 C12A-A182 F91)	538°C
300 series forged austenitic steels	538°C

3 – SEISMIC STRESSES
No additional analysis is required, up to acceleration of 1.5 g perpendicular to the actuator axis, when Parcol valves equipped with standard pneumatic actuators are installed in seismic areas.
The 1.5 g value has been calculated, with upward oriented actuator, for lowest rating globe valves withstanding most severe process conditions.
For specialty valves, or when different type of actuator is installed, seismic calculation is performed only where required.

4 – PIPING STRESSES
In general it is not necessary to perform any check and calculation if pipe size is no larger than 1,5 times valve body size (2 times for valve body size up to 3”). As the control valve has not to be used as a fixed point, if inlet and outlet pipe sizes are different, it should be considered the smaller one as it is essential for the piping design.

5 – VIBRATIONS, FATIGUE, etc.
When the control valve is correctly sized and selected (suitable trim type and sizes of body connections) significative vibrations caused by the valve itself should not occur. However on critical services (cavitating or flashing liquids), small changes in process conditions may cause vibration phenomena even of high intensity which can seriously damage trim parts and various accessories installed on the valve actuator. In this case it is necessary to restore the original service conditions, if possible, otherwise the type of trim has to be differently selected.

6 – EROSION, CORROSION

6.1 – Flashing and cavitating liquids
When flashing or cavitation occur, it is advisable to use body materials such as Cr. Mo. alloy steel or stainless steel, with increased size and rating, with particularly designed trim type.

6.2 – Corrosion
For corrosion purpose PARCOL control valves are designed taking into account an allowance of body wall thickness equal to 2 mm. for casted bodies and 1 mm. for fabricated or forged ones, up to a maximum designed wall thickness of 30 mm.
In case of diffused intergranular corrosion it is possible to foresee the expected lifetime of valve taking into account the increased wall thickness to this purpose. In case of local corrosion, particularly with chlorides, such as pitting, interstitial corrosion on gasket seating surfaces and stress corrosion, it is not possible to make any realistic prediction of expected lifetime of valve. In these circumstances it is essential to properly select the material of valve body.

6.3 – Sulfide stress cracking
In case of services with fluids containing Hydrogen Sulfide S.S.C. must be considered (refer to NACE MR01-75 norms for materials selection) and all selected materials for valve construction have to be correctly selected.

6.4 – Fluids containing abrasive solid particles
The presence of abrasive solid particles into the controlled fluid is the main cause of trim erosion, in addition to possible reduction of wall thickness of pressure containing parts.

7 – EXTERNAL FIRE
PARCOL control valves are not designed to withstand external fire.

8 – PROTECTION AGAINST OVERPRESSURES

8.1 – Overpressures during safety valves discharge
Control valves must be protected against overpressures above the maximum allowable rating pressure. Pressure peaks are allowable, for limited time, during safety valve discharge, up to 10% over the maximum allowable working pressure.

8.2 – Water hammer caused by the action of quick closing valves
Particularly with incompressible fluids it is imperative not to cause the quick closing of valves to avoid hydraulic shock waves which cause uncontrolled overpressure and damages of piping and connected equipment. To this regards it has to be avoided the installation of control valves with flow to close fluid action, with unbalanced plug and with standard pneumatic actuators.

9 – ACTUATOR MAXIMUM THRUST
Any further check is not necessary when control valves are supplied with PARCOL standard pneumatic actuators. In other cases it is strictly necessary to calculate if the maximum given thrust is acceptable to the supplied valve.

10 – DEAD-END PIPING VALVES
PARCOL valves are not designed to perform closure in dead-end piping, even they are supplied for on-off service.

11 – CYCLIC LOADS OF PRESSURE AND TEMPERATURE
For most of installations possible cyclic changes of pressure and/or temperature do not influence the expected lifetime of control valves. The above assuming the following working conditions:
- maximum working temperature not exceeding 550 °C;
- fluid temperature change rate 2 K/min or less;
- cyclic change of working pressure within 1/3 of maximum allowable rating pressure at corresponding temperature.

When working conditions are outside the above specified ones a particular check is necessary to calculate the expected lifetime of the valve.

1-4825 SERIES CONTROL VALVES

INSTRUCTION MANUAL – USE – MAINTENANCE

FOREWORD

PARCOL control valve series 1-4825 is built with single seat non-reversible body and top guided plug. The stem is built enbloc with the plug.
Application field: this valve can solve special control problems on fluids which can stagnate inside the valve and damage the packing seal. On this subject we stress the presence of a stem flushing device to minimize this inconvenience. See point 1.7. The valve is also provided with a control system for the packing zone temperature.
See points 1.8 and 1.9.
Typical applications are urea plants and similar.
Ratings over PN100 and up to PN420.

1 INSTALLATION

1.1 A straight pipe at least 10 DN long must be installed upstream the valve in the piping and a further 5 DN length must be installed downstream. Purpose of the above requirements is to avoid stream deviations at body connections, mainly in the inlet one. Reducers are allowed along aforementioned straight lengths, provided that they are duly tapered and concentric. The more the above requirements are met, the more the valve will operate according to the design pattern, with regard to sizing, as well as to noise, plug stability and so on.

1.2 Before installing the valve in the line, especially in new plants, check that pipes are clean and free from welding chips.

1.3 A by-pass line must be installed, to allow the control valve maintenance without shutting down the process. The need of the by-pass must be stated for each specific application. The two shut-off valves located aside the control valve must have the same port as the pipeline, not to cause considerable head losses when completely open. The by-pass valve should have the same port (full size or reduced) as the control valve.

1.4 1-4825 series valves are normally installed in such a way that the flow action tends to open the plug, unless otherwise specified.

1.5 The flow direction, according to what above specified, is identified by the arrow printed on the indicating plate.

1.6 Valves are normally installed with upward oriented actuator. Anyhow they may be installed and properly operate in any other position. Valves should not be installed with downward oriented actuator if the fluid holds solid particles which then may build-up in the body and damage the packing seal.

1.7 Two 1/4" female NPT nozzles are provided on the valve body for flushing connection.

1.8 Two 1/4" female NPT nozzles are provided in the seat ring top to supply the fluid for metal wall temperature control.

1.9 A block provided with two 1/4" female NPT nozzles is mounted on the plug top to supply the fluid for metal wall temperature control inside the plug. The circuit design compels the fluid to flow down till the seal zone and then to go up and get out from the suitable nozzle.

2 VALVE DISASSEMBLY / REASSEMBLY

2.1 VALVE DISASSEMBLY

2.1.1 Remove the actuator from the valve (see actuator instruction manual) and take note of the distance between valve stem and actuator stem.

2.1.2 Remove screws (38) and square flange (37), then remove the actuator connection (7) by acting on the two machined surfaces.

2.1.3 Remove gasket (12), slip out cooling connector (36) from the plug and remove gaskets (10 and 11) if necessary.

2.1.4 Remove nuts (24), take out packing flange (17) and packing follower (252).

2.1.5 Set the valve in horizontal position, remove connection flange (20), nuts (4), slip out seat (6) together with flange (2).

2.1.6 Carefully remove plug (5) not to damage the guide stem and, if necessary, remove cooling fluid pipe (35) by acting on the 4 mm wide milling provided on pipe head.

2.1.7 For disassembly and reassembly of packing see point 4.

2.2 VALVE REASSEMBLY

2.2.1 Turn the valve body upside down, insert plug (5) and mount seat (6) together with flange (2) and aligne seat and body by checking the distance between flange and body by means of a thickness gauge.

2.2.2 Thoroughly tighten nuts (4), screw connection flange (20) and reset the valve in vertical position.

2.2.3 Stuff the packing box as outlined under point 4.2.

2.2.4 Screw cooling fluid pipe (35) inside the plug, if previously removed. Check its position for correctness by ensuring that the distance

between pipe head and plug end is higher than the length of the locking thread of item (7).

2.2.5 Check that gaskets (10 and 11) are in relevant seats and insert cooling connector (36).

2.2.6 Insert gasket (12), screw actuator connection (7), check that the group components are integral, then fasten square flange (37) by screws (38).

2.2.7 Mount all connections for temperature control and for flushing according to instruction reported on valve body and overall dimension drawing.

2.2.8 Mount the actuator on the valve using the eyebolts.

2.2.9 Thoroughly screw ring nut (18) by acting on its notches with a punch. For valve actuator type 600L and the cylinder operated ones tighten screws (18a) or (540) (see actuator instruction manual).

2.2.10 Check that the plug is in the seat and adjust the actuator stem position by restoring the distance measured during the actuator disassembly.

2.2.11 Mount stem connector and travel indicator and set the valve as outlined under point 3.

3 VALVE WITH PNEUMATIC DIAPHRAGM ACTUATOR SETTING

Valves are factory set and supplied complete with test certificate. It is however recommended to further check the setting before putting the valve in service.
This may be done by means of a pressure gauge and an air pressure regulator with output adjustable between 0 and 5 bar. Connect the air pressure regulator inlet with the air supply line and the outlet with the valve actuator. The pressure gauge measures the air pressure in the actuator.
Then proceed as below outlined for the three different cases:
" air-to-close diaphragm ", " air-to-open diaphragm " and " air-to-open cylinder ".

3.1 VALVES WITH "DIRECT ACTION" DIAPHRAGM 1-X-211 (AIR -TO-CLOSE)

(reference is made to a 3÷15 psi setting)

3.1.1 Acting on the air pressure regulator increase the air pressure on the diaphragm until plug (5) stops (against the seat) at the end of its travel.

3.1.2 Check that the air pressure is 15 psi. Turn if necessary the spring adjusting screw of actuator until the requested value is met.

3.1.3 Check that travel indicator is in the "0" position marked on the travel indicator scale. Displace the plate if necessary.

3.1.4 Slowly decrease the air pressure until the travel indicator performs the rated travel. The air pressure should be 3 psi (plus/minus range tolerances).

3.2 VALVES WITH "REVERSE ACTION" DIAPHRAGM 1-X-212 (AIR-TO-OPEN)

(reference is made to a 6÷30 psi setting)

3.2.1 Acting on the air pressure regulator increase the air pressure on the diaphragm until the plug begins to move.

3.2.2 Check that the pressure gauge indicates 6 psi. Adjust if necessary the spring loading screw and the pressure regulator .

3.2.3 Check that the travel indicator is in the "0" position marked on the travel indicator scale. Displace the plate.

3.2.4 Increase the air pressure until the plug has completed the rated travel. The air pressure should be 30 psi (plus/minus range tolerances).

3.3 VALVES WITH "REVERSE ACTION" CYLINDER 1-X-432 (AIR -TO-OPEN)

(reference is made to a 1.5÷3 bar setting)

3.3.1 Acting on the air pressure regulator increase the air pressure on the cylinder until the plug begins to move.

3.3.2 Check that the pressure gauge indicates 1.5 bar and the travel indicator is in the "0" position marked on the travel indicator scale. Displace the scale if necessary.

3.3.3 A small correction may be carried out at the beginning of the range by approaching or spacing out cylinder stem and valve stem. To do this release the tension of spring on stem by acting on the manual device for some few millimeters travel.

3.3.4 Increase the air pressure until the plug has completed the rated travel. The air pressure should be 3 bar (plus/minus range tolerances).

4 PACKING SEAL

Packing of control valves is worthy of special care, due to the presence of the stem flushing device which complicates the design; its wrong use may affect the performances of the entire valve. It is not sufficient to take care of its sealing capacity, but ut is necessary to check that it does not cause too much friction against the stem.

4.1 DISASSEMBLY OF "V-RING" PACKING (Fig. 2)

4.1.1 Disassemble the valve as per point 2.1.

4.1.2 Remove packing follower (252), take out seal rings and spacers, normally by using a small rod shaped as a hook; pay attention not to damage the box surface.

4.2 REASSEMBLY OF "V-RING" PACKING (Fig. 2)

4.2.1 For this packing type shaped rings made of loaded teflon are used; bottom rings are then added to form the "seal ring packing".

4.2.2 The packing is composed by more seal elements having different purposes. The element located at box bottom is the main one. The two intermediate elements, opposite oriented, have the function to guide the stem flushing fluid. The last element, formed by three seal rings, has the function of double seal.

4.2.3 Locate first bottom bushing (267) at box bottom, then insert all the others packing parts one at a time; carefully follow location and orientation shown in Fig. 3, not to affect the tightness.

4.2.4 Namely, where the stem threading diameter is equal or slightly lower than the packing ring inside diameter, wrap it with a soft ribbon, not to damage the rings during the assembly.

4.2.5 Insert packing follower (252) and packing flange (17) and begin tightening nuts (24) alternatively, in order to evenly press the seal ring packs.

4.2.6 Do not overtighten them at the beginning; during the plant start-up it is better to have a small leakage rather than the stem locked due to excessive friction. After sometime, when the process temperature is attained, gradually tighten nuts to eliminate eventual leakage with minimum friction.

4.2.7 When the packing is set up tighten nuts (24) in order that eventual vibrations do not modify the packing tightening.

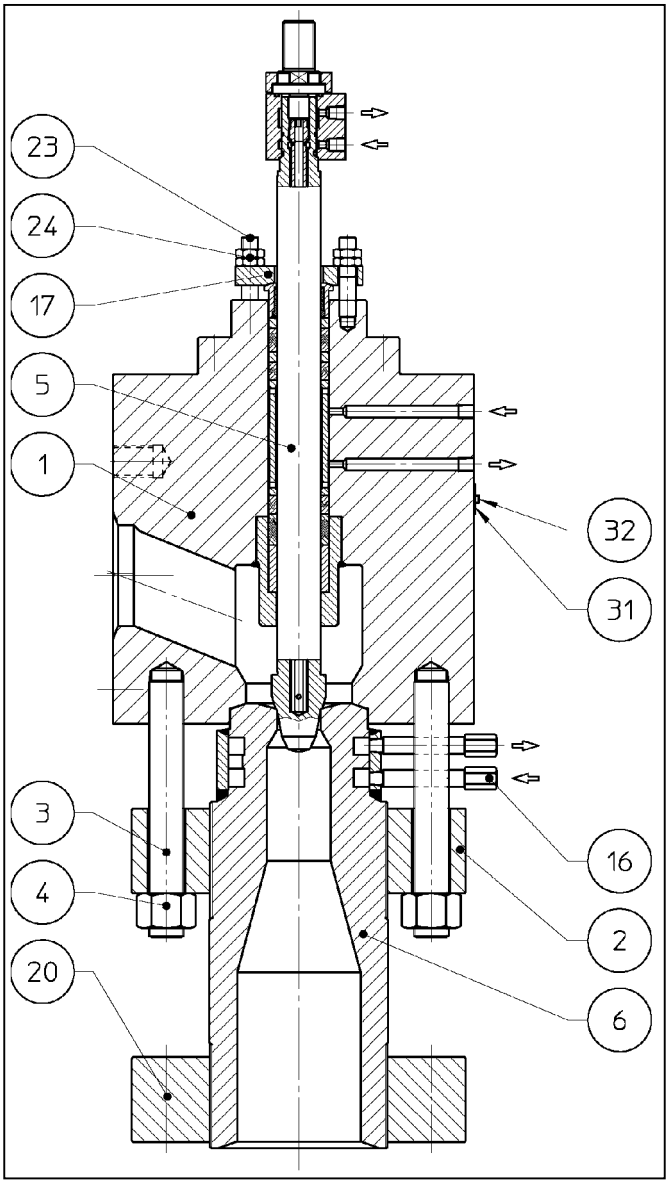

Fig. 1

ITEM	PART NAME
1	BODY
2	FLANGE
3	STUD
4	NUT
5	PLUG
6	SEAT
16	COOLING FLUID CONNECTIONS
17	PACKING FLANGE
20	CONNECTION FLANGE
23	STUD
24	NUT
31	SERIAL PLATE
32	SCREW

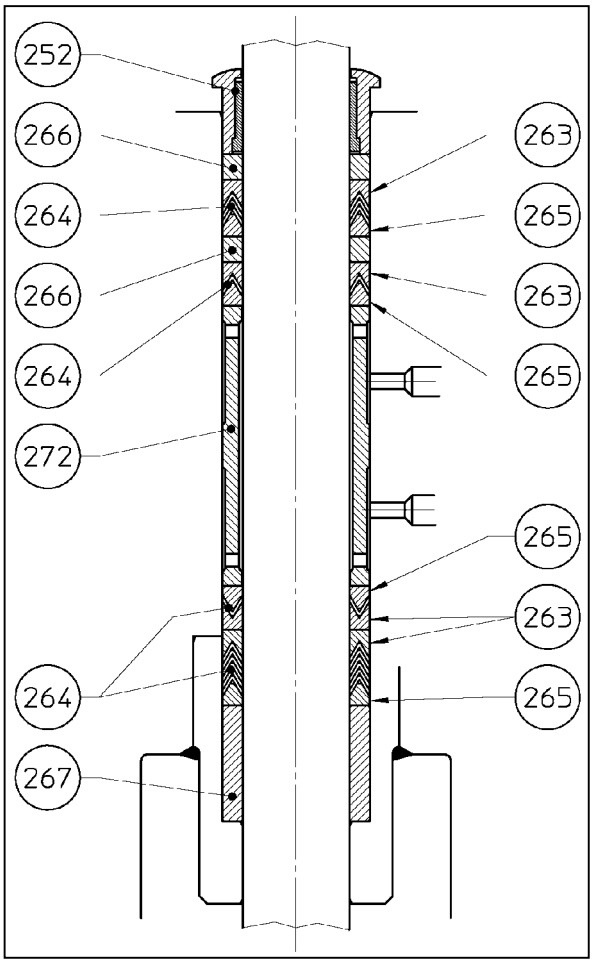

Fig. 2

ITEM	Q.ty	PART NAME
252	1	PACKING FOLLOWER
263	1+1+1+1	TOP RING
264	6+1+1+3	PACKING RING
265	1+1+1+1	BOTTOM RING
266	2	RING SPACER
267	1	BOTTOM BUSHING
272	1	LANTERN RING

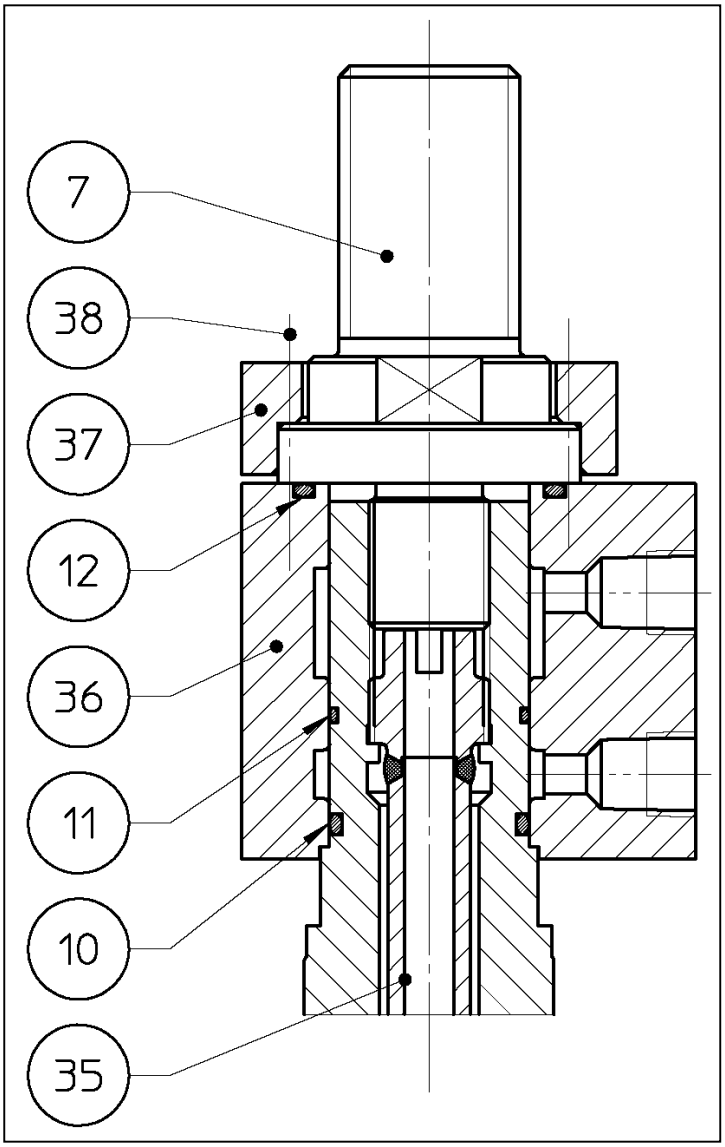

Fig, 3 – Plug cooling device

ITEM	PART NAME
7	ACTUATOR CONNECTION
10	O-RING
11	O-RING
12	O-RING
35	COOLING FLUID PIPE
36	COOLING CONNECTOR
37	SQUARE FLANGE
38	SCREW

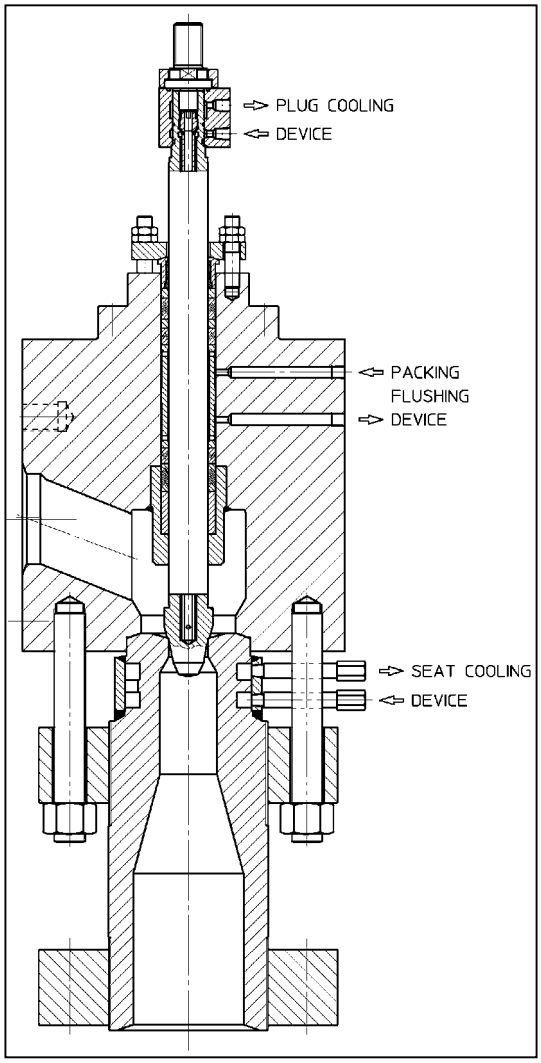

Fig, 4 – Packing flushing and plug/seat cooling connections

MEDIA	Hot water or condensate	
TEMPERATURE	20 ÷ 50 °C	
PRESSURE	4 ÷ 9 kg/cm²	
MAX FLUID CONSUMPTION	FLUSHING.: 200 kg/h	
	SEAT COOLING:	150 kg/h
	PLUG COOLING:	150 kg/h
CONNECTIONS	¼" NPT (F)	

PARCOL S.p.A. Via Isonzo, 2 - 20010 CANEGRATE (MI) - ITALY
Telephone: +39 0331 413 111 - Fax: +39 0331 404 215
E-mail: sales@parcol.com - http://www.parcol.com